Paper Reference(s) 9PH0/01

Pearson Edexcel Level 3 GCE

Physics

Advanced

PAPER 1: Advanced Physics I

Total Marks

Friday 23 May 2025 – Morning

Time: 1 hour 45 minutes

Question Paper

THIS DOCUMENT MUST BE RETURNED TO PEARSON AT THE END OF THE EXAMINATION

In the boxes below, write your name, centre number and candidate number.

Surname					
Other names					
Centre Number					
Candidate Number					

Pearson

YOU MUST HAVE

Scientific calculator and ruler
Data, Formulae and Relationships Booklet (enclosed)

YOU WILL BE GIVEN

Diagram Booklet

INSTRUCTIONS

Answer ALL questions.

Answer the questions in the spaces provided in this Question Paper or in the separate Diagram Booklet – there may be more space than you need.

INFORMATION

The total mark for this paper is 90.

The marks for EACH question are shown in brackets – use this as a guide as to how much time to spend on each question.

In the question marked with an ASTERISK (*), marks will be awarded for your ability to structure your answer logically, showing how the points that you make are related or follow on from each other where appropriate.

ADVICE

Read each question carefully before you start to answer it.

Try to answer every question.

Check your answers if you have time at the end.

You are advised to show your working in calculations including units where appropriate.

Answer ALL questions.

All multiple choice questions must be answered with a cross in the box ☒ for the correct answer from A to D. If you change your mind about an answer, put a line through the box ☒ and then mark your new answer with a cross ☒.

1 Which of the following was investigated by the large-angle alpha particle scattering experiment?

☐ **A structure of an atom**

☐ **B structure of a nucleon**

☐ **C structure of a nucleus**

☐ **D structure of a quark**

(Total for Question 1 = 1 mark)

---

2 **Which of the following is a scalar quantity?**

- ☐ **A** **charge**
- ☐ **B** **displacement**
- ☐ **C** **electric field strength**
- ☐ **D** **force**

(Total for Question 2 = 1 mark)

---

3 **Look at the diagram for Question 3 in the Diagram Booklet. A ball is tied to the end of a length of string. A person holds the other end of the string. The person spins the ball and string around in a horizontal circle, as shown.**

Which of the following statements best describes why the person feels a force from the string?

☐ **A** **There is a centripetal force acting on the person.**

☐ **B** **There is a force on the person due to Newton's first law.**

☐ **C** **There is a force on the person due to Newton's third law.**

☐ **D** **There is a force on the person due to the weight of the ball.**

(Total for Question 3 = 1 mark)

---

4 A wire of resistance **R** has a circular cross-sectional area.

A second wire has the same length and is made of the same material. The diameter of the second wire is double the diameter of the first wire.

Which of the following is the resistance of the second wire?

☐ **A** 4R

☐ **B** 2R

☐ **C** $\frac{R}{2}$

☐ **D** $\frac{R}{4}$

(Total for Question 4 = 1 mark)

5 **A positron produced a track in a detector, as shown.**

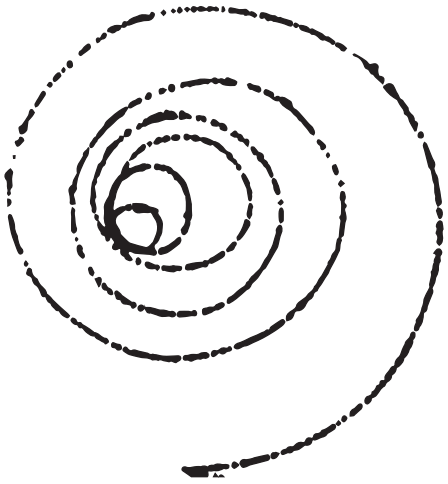

Which of the following is the direction of the magnetic field in this detector?

☐ **A** **down the page**

☐ **B** **into the page**

☐ **C** **out of the page**

☐ **D** **up the page**

(Total for Question 5 = 1 mark)

Questions 6 and 7 refer to the information below.

Look at the diagram for Questions 6 and 7 in the Diagram Booklet. A high-voltage d.c. power supply was connected to two parallel metal plates and an ammeter, as shown.

6 The distance between the two plates was decreased.

Which row of the table is correct?

	Direction of electric field	Change in electric field strength
☐ A	P to Q	decreased
☐ B	Q to P	decreased
☐ C	P to Q	increased
☐ D	Q to P	increased

(Total for Question 6 = 1 mark)

7 **Look again at the diagram for Questions 6 and 7 in the Diagram Booklet. Decreasing the distance between the two plates increases the capacitance of the two parallel plates.**

The separation was decreased at time X. At time Y the separation became constant.

Look at the graphs for Question 7 in the Diagram Booklet. Which of the following graphs shows how the reading I on the ammeter changed with time t?

☐ **A** **Graph A**

☐ **B** **Graph B**

☐ **C** **Graph C**

☐ **D** **Graph D**

(Total for Question 7 = 1 mark)

---

8 The initial potential difference (p.d.) across a capacitor is V_0

The capacitor is discharged through a resistor.

The p.d. across the capacitor decreases to $\frac{V_0}{3}$ in 2 milliseconds.

Which of the following is equal to the time constant, in milliseconds, for this capacitor-resistor circuit?

☐ **A** $\frac{\ln 3}{2}$

☐ **B** $\frac{2}{\ln 3}$

☐ **C** 3

☐ **D** $\frac{2}{3}$

(Total for Question 8 = 1 mark)

Questions 9 and 10 refer to the information below.

Look at the diagram for Questions 9 and 10 in the Diagram Booklet. A ball was thrown so that it followed the path shown. Assume drag forces were negligible.

9 **Look at the diagrams for Question 9 in the Diagram Booklet. Which of the following is a free-body force diagram for the ball at its maximum height?**

☐ **A** **Diagram A**

☐ **B** **Diagram B**

☐ **C** **Diagram C**

☐ **D** **Diagram D**

(Total for Question 9 = 1 mark)

---

10 **Look again at the diagram for Questions 9 and 10 in the Diagram Booklet.**

Look at the graphs for Question 10 in the Diagram Booklet. Which of the following graphs shows how the vertical component of the velocity, v_V, varies with time t from when the ball is thrown to just before it hits the ground?

☐ **A** **Graph A**

☐ **B** **Graph B**

☐ **C** **Graph C**

☐ **D** **Graph D**

(Total for Question 10 = 1 mark)

---

11 Diodes are used in a variety of electrical circuits.

(a) Look at the diagram for Question 11(a) in the Diagram Booklet. Sketch the current-potential difference graph for a diode.
(2 marks)

(b) A package containing a light emitting diode (LED) is marked

"20 mA 3·2 V to operate normally".

A student uses a 5 V power supply of negligible internal resistance to operate the LED.

Calculate the resistance of a protective resistor required to operate the LED normally from this power supply.
(3 marks)

Answer space continues on the next page.

11(b) continued.

_____

_____

_____

_____

Resistance = _____

(Total for Question 11 = 5 marks)

_____

12 **The image shows a lever-arm balance. The balance can be used to measure the mass of objects to the nearest gram.**

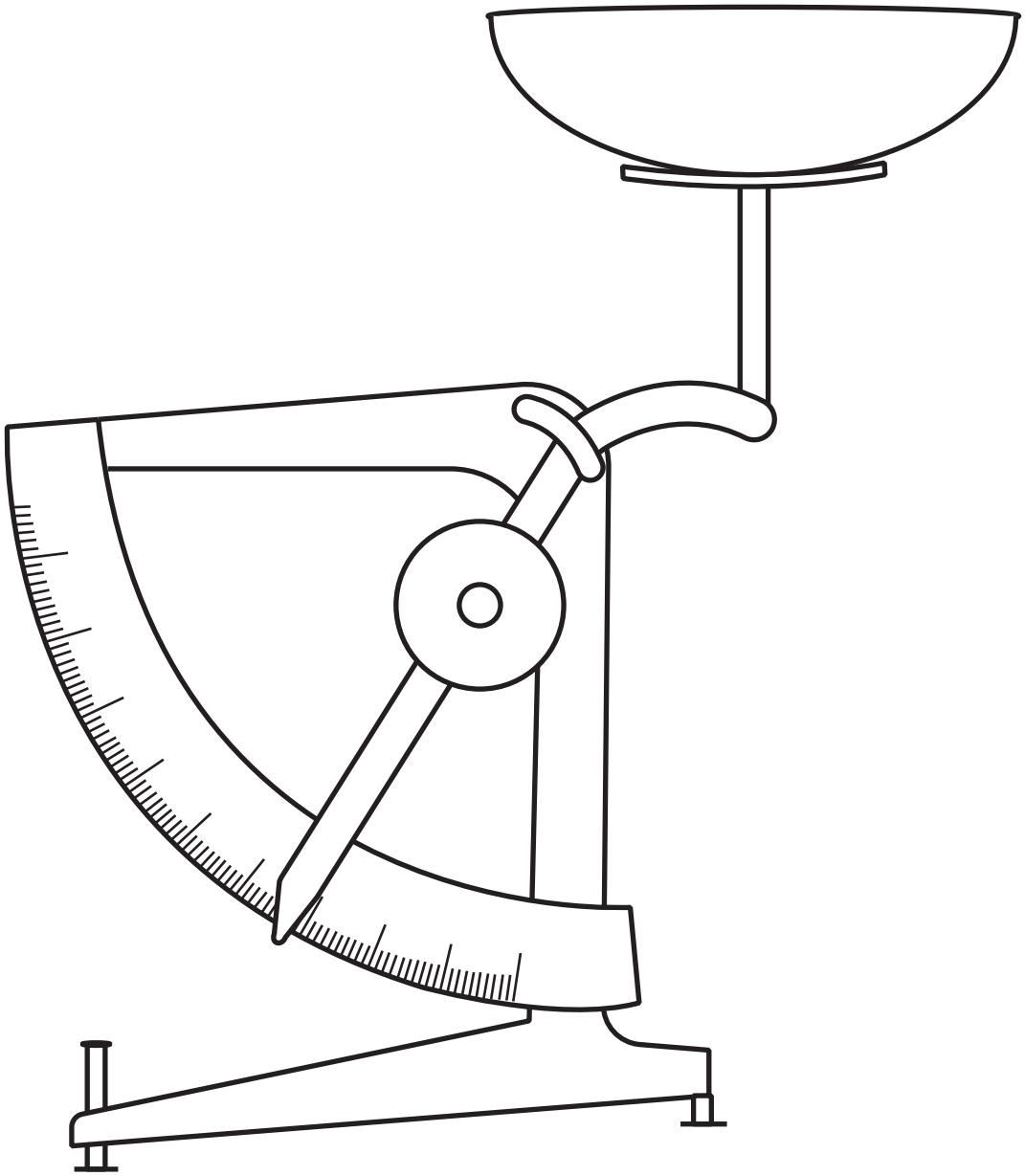

Look at the diagram for Question 12 in the Diagram Booklet. The lever-arm is a length of metal, bent at one end as shown in the diagram. The lever-arm can rotate around the pivot, P.

(continued on the next page)

12 continued.

The arrangement is in equilibrium.

(a) State the two conditions needed for the arrangement to be in equilibrium.
(2 marks)

(continued on the next page)

12 continued.

(b) Determine the weight of the counterweight.

Assume the mass of the lever-arm is negligible.
(4 marks)

mass of pan = 260 g

Answer space continues on the next page.

12(b) continued.

_____

_____

_____

_____

Weight of counterweight = _____

(continued on the next page)

12 continued.

(c) An object is placed in the pan. The lever-arm moves along the scale.

Explain why the lever-arm pointer moves through a large distance whilst the pan moves a much shorter distance.
(2 marks)

Answer space continues on the next page.

12(c) continued.

(Total for Question 12 = 8 marks)

13 Solar cells are being used in increasing numbers around the world.

Look at the diagram for Question 13 in the Diagram Booklet. The current I from a solar cell can be varied by connecting it to a variable resistor. The graph shows how I and the terminal potential difference V across a solar cell vary.

(a) Look at the diagram for Question 13(a) in the Diagram Booklet. Complete the circuit diagram to show how the data for the graph could be obtained.
(2 marks)

(b) (i) Show that the maximum power output from the solar cell is about $2\,W$. You should use values from the graph.
(2 marks)

Answer space continues on the next page.

13(b)(i) continued.

(continued on the next page)

13(b) continued.

(ii) The area of the solar cell is $104\,cm^2$

Determine the efficiency of the solar cell when operating at maximum power.
(3 marks)

intensity of sunlight = $1000\,W\,m^{-2}$

Answer space continues on the next page.

13(b)(ii) continued.

_____

_____

_____

Efficiency = _____

(continued on the next page)

13(b) continued.

(iii) Calculate the internal resistance of the solar cell when operating at maximum power.
(3 marks)

Internal resistance = _____

(Total for Question 13 = 10 marks)

14 Flowers can attract bees by being colourful or by producing a scent. Some flowers also attract bees by producing an electric field.

(a) Look at the diagram for Question 14(a) in the Diagram Booklet. Draw the electric field around a negative point charge.
(2 marks)

(b) When a bee gets close to a flower it can detect the electric field. The charge on the flower acts as a point charge at the centre of the flower.

(i) At a distance of 0·06 m from the centre of a particular flower the potential is –16 V

Show that the charge on this flower is about –0·1 nC
(3 marks)

Answer space continues on the next page.

14(b)(i) continued.

(continued on the next page)

14(b) continued.

(ii) The minimum field strength that a bee can detect is $120\,V\,m^{-1}$

A teacher suggests that bees can detect the field when they are closer than $10\,cm$ from the flower in (b)(i).

Deduce whether this suggestion is correct.
(3 marks)

Answer space continues on the next page.

14(b)(ii) continued.

(continued on the next page)

14 continued.

(c) It is suggested that the hairs on a bee deflect slightly when close to the flower.

Explain what would cause a hair to deflect in an electric field.
(2 marks)

(Total for Question 14 = 10 marks)

15 **A sigma ($\sum^{+}$) particle is a baryon. It can decay into a positive pion and a neutron.**

(a) **Look at the diagram for Question 15(a) in the Diagram Booklet. Complete the particle equation for this decay.**
(2 marks)

(b) **Explain whether the conservation laws of charge and baryon number are obeyed for this decay.**
(2 marks)

(continued on the next page)

15 continued.

(c) Look at the table for Question 15(c) in the Diagram Booklet. It summarises the charges for three types of quark.

The sigma particle has one strange quark within its structure.

Deduce the quark structure for $\sum^{+}$
(2 marks)

(continued on the next page)

15 continued.

(d) Look at the diagram for Question 15(d) in the Diagram Booklet. It shows tracks in a particle detector associated with this decay.

(i) State why the neutron does not leave a track. (1 mark)

(continued on the next page)

15(d) continued.

(ii) The initial momentum of the positive pion is $1{\cdot}1 \times 10^{-19}$ N s

The scale of the diagram is 1 cm represents 15 cm

Determine the magnitude of the magnetic flux density acting perpendicularly to the tracks.

(4 marks)

Answer space continues on the next page.

15(d)(ii) continued.

Magnetic flux density = _____

(Total for Question 15 = 11 marks)

16 Curling is a sport played on ice. Players slide stones made of granite along the ice. The aim of the sport is to slide a stone into a circular area called the target.

Look at the diagram for Question 16 in the Diagram Booklet. The diagram shows two stones, **A** and **B**. Each stone has a mass of **18 kg**

Stone **A** is moving with a velocity of $2{\cdot}1\ \mathrm{m\,s^{-1}}$, as shown. **B** is initially stationary.

(a) (i) Show that the momentum of **A** is about **40 N s**
(2 marks)

(continued on the next page)

16(a) continued.

(ii) Stone A collides with stone B.

Look at the diagram for Question 16(a)(ii) in the Diagram Booklet. It shows the velocity of stone B after the collision. The point of collision is marked X.

Deduce whether stone A moves in the direction shown after the collision.
(5 marks)

Answer space continues on the next page.

16(a)(ii) continued.

(continued on the next page)

16 continued.

(b) Stone A comes to rest 1·9 m from X. The deceleration of the stone on the ice is 0·10 m s^{-2}

Deduce whether the collision was elastic.

(4 marks)

Answer space continues on the next page.

16(b) continued.

(Total for Question 16 = 11 marks)

17 **Look at the diagram for Question 17 in the Diagram Booklet. It shows a section through the components of a speedometer for a bicycle. The front wheel axle of the bicycle is connected to a cable. The cable rotates as the bicycle wheel rotates. The other end of the cable is connected to a magnet which also rotates, as shown.**

An aluminium disc is shaped so that it is close to, but not touching, the magnet. The disc is connected to a pointer by a shaft. A spring prevents the disc and shaft from freely rotating.

***(a) Explain why the aluminium disc rotates in the same direction as the magnet.**
(6 marks)

Answer space continues on the next 2 pages.

17(a) continued.

17(a) continued.

(continued on the next page)

17 continued.

(b) The road speed of the bicycle should be displayed by the speedometer.

Explain why the displayed speed can NOT be accurate, as bicycles can have different wheel diameters.
(2 marks)

(continued on the next page)

17 continued.

(c) A cyclist has a constant speed of $8{\cdot}3\,\mathrm{m\,s^{-1}}$ on a flat road. The cyclist generates an average power of $190\,\mathrm{W}$
The total mass of the cyclist and bicycle is $75\,\mathrm{kg}$

Look at the diagram for Question 17(c) in the Diagram Booklet. The cyclist comes to a hill of gradient 1 in 20, as shown.

The cyclist now generates an average power of $330\,\mathrm{W}$
The speed decreases to a constant value which the speedometer suggests is $5{\cdot}6\,\mathrm{m\,s^{-1}}$

Deduce whether the speedometer is accurate.

Assume resistive forces are constant.
(4 marks)

Answer space continues on the next page.

17(c) continued.

(Total for Question 17 = 12 marks)

18 **At the Facility for Rare Isotope Beams (FRIB) isotopes of elements that do not occur naturally can be produced.**

(a) **Look at the diagram for Question 18(a) in the Diagram Booklet. FRIB contains a linear accelerator. The initial section of the accelerator is shown.**

Explain why the tubes get progressively longer. (4 marks)

Answer space continues on the next page.

18(a) continued.

(continued on the next page)

18 continued.

(b) A uranium atom ($^{238}_{92}U$) has 80 electrons removed. The uranium ion is then accelerated between two adjacent tubes until its kinetic energy is 200 MeV per nucleon.

(i) Calculate the accelerating potential difference. (4 marks)

Answer space continues on the next page.

18(b)(i) continued.

_____

_____

_____

Potential difference = _____

(continued on the next page)

18(b) continued.

(ii) Show that the uranium ions will reach a velocity of about 65% of the speed of light. (3 marks)

(continued on the next page)

18 continued.

(c) When a uranium ion hits a target at this speed the ion is likely to break up and produce smaller elements. One particular isotope produced in this way is $^{40}_{12}Mg$

The naturally occurring common stable isotope of magnesium is $^{24}_{12}Mg$

Explain why the break-up of $^{238}_{92}U$ is likely to produce unusual isotopes such as $^{40}_{12}Mg$

(2 marks)

Answer space continues on the next page.

18(c) continued.

(Total for Question 18 = 13 marks)

TOTAL FOR PAPER = 90 MARKS

END OF PAPER

Question 5

Source adapted from: © Science Source / SCIENCE PHOTO LIBRARY

Question 12

Source adapted from: © sasaperic / Getty Images